ATR

MODEL 100-1

SER. NO. 850-2122

MP MASTER
MA27880

ATR

MODEL 100-1

SER. NO. 85D-2122

ELECTRONIC MEASUREMENTS, INC.
405 ESSEX ROAD
NEPTUNE, NJ 07753
(201) 922-9300

TWO-YEAR WARRANTY

Electronic Measurements, Inc. warrants this equipment manufactured by us and sold by us or our authorized agents to a manufacturer or end user to be free from defects in material or workmanship Our liability under this warranty is limited to servicing and repair or relacement of parts when equipment is returned to us with transportation charges prepaid within a period of two years after original shipment and when the equipment is shown by our inspection to be thus defective, normal wear and tear excepted.

This warranty does not apply to equipment subjected to abuse or incorrect installation or operation, nor to equipment repaired or modfied outside of the Electronic Measurements, Inc. factory unless prior written approval to make such repairs or modifications has been received from the factory. The foregoing warranty is in leiu of all other express or implied warranties except of title

ELECTRICAL STANDARDS

All company primary standards are either certified directly or are traceable to certification by the National Bureau of Standards.

CLAIM FOR DAMAGE IN SHIPMENT

This instrument received comprehensive mechanical and electrical inspections before shipment. Immediately upon receipt from the carrier, and before operation, this instrument should be inspected visually for damage caused in shipment. If such inspection reveals internal or external damage in any way, a claim should be filed with the carrier. A full report of the damage should be obtained by the claim agent and this report should be forwarded to us. We will then advise you of the disposition to be made of the equipment and arrange for repair or replacement. When referring to this equipment, always include the model and serial numbers.

RETURNING EQUIPMENT

Before returning any equipment to the factory, the following steps should be taken:

1. Notify Electronic Mesasurments, Inc., at 800-631-4298. Give a full description of the difficulty including the model and serial number of the unit in question. Upon receipt of this information we will assign a Return Material Authorization number (RMA) and give you shipping instructions.

2. Equipment returned to us must be packed in a manner to reach us without damage, and the shipping container must be marked with the RMA number in an area approximate to the shipping label with numbers that are easily read. All returned units that do not show the RMA number on the outside of the container will be refused.

3. For non-warranty repairs, we will submit a cost estimate for your approval prior to proceeding.

TABLE OF CONTENTS

I. GENERAL INFORMATION

1.1 Description..... 1
1.2 Specifications..... 2

II. OPERATING INSTRUCTIONS

2.1 Preparation for Use..... 4
2.2 General Operation..... 4
2.3 Overvoltage Operation..... 6
2.4 Modes of Operation..... 6
2.4.1 Normal Mode..... 6
2.4.2 Remote Sensing..... 7
2.4.3 Remote Programming..... 7
2.4.3.1 Remote Programming, External Resistance..... 8
2.4.3.2 Remote Programming, External Voltage..... 8
2.4.3.3 Remote Programming, External Current..... 9
2.4.4 Parallel Operation..... 10
2.4.4.1 Parallel Operation-Direct Connection..... 10
2.4.4.2 Parallel Operation-Master/Slave..... 10
2.4.5 Series Operation..... 11
2.4.5.1 Series Operation-Master/Slave..... 11

III. PRINCIPLES OF OPERATION

3.1 General..... 13
3.2 Power Flow Circuitry..... 13
3.3 A100 Printed Circuit Board..... 14
3.4 A200 Printed Circuit Board..... 14

IV. MAINTENANCE AND TROUBLE SHOOTING

4.1 General..... 16
4.2 Trouble Shooting Guide..... 16
4.3 Calibration..... 18
4.3.1 Programming Calibration..... 18
4.3.2 Zero Offset..... 18
4.3.3 Voltage Calibration..... 18
4.3.4 Current Calibration..... 18
4.3.5 Automatic Range Calibration..... 19

V. PARTS LIST

5.1 General..... 21
5.2 List of Manufacturers..... 21
5.3 Recommended Spare Parts List..... 24
5.4 ATR Parts List..... 26

Produced on 05 JUN 1984

Produced on 05 JUN 1984

SECTION I
GENERAL INFORMATION

1 1 DESCRIPTION

This manual contains operation and maintanence instruction covering the ATR power supply series manufactured by Electronic Measurement, Inc of Neptune, New Jersey These supplys are able to produce peak power output at three operating ranges instead of the single maximum voltage/maximum current peak output most other series regulated supplies provide

The supply could be controlled in constant voltage or constant current The modes of the controlled parameters are indicated by the multicolored LEDS In addition there are related color code meter scales which designate the voltage and current range. These supplys have a carrying handle for portability and tilt mounting for convenient visibility of the front panel A rack adaptor is also available to mount power supplies in a 5 1/4 inch high standard relay rack space

This series of power supplys utilizes series pass, thermostatically protected transistors to accomplish the final regulation It has a tapped transformer and a system of triac tap changers to automatically select the optimum operating range The linear series pass system decreases the heat dissipation and improves efficiency

A brief description of the expansible standard features of the ATR series power supplys are given below

A Remote Sensing- The degradation in regulation which occurs at the load due to voltage drop in the load leads is reduced by using the power supply in the remote sensing mode of operation

B Remote Programming- The power supply output voltage or current is controlled from a remote location by means of an external voltage source or resistance

C Parallel Operation- The power supply output is operated in parallel with another unit when greater output current capability is required The parallel operation permits one "master" supply to control the other supplys

D Series Operation- Two power supplys are used in series when a higher output voltage is required in the constant voltage mode of operation or when greater voltage compliance is required in the constant current mode of operation

1.2 SPECIFICATIONS

Standard AC Inputs Available

ATR 250 - 7.5 Amps - 115 Volts or 4 Amps 230 Volts
ATR 100 - 3 Amps - 115 Volts or 1.5 Amps 230 Volts
ATR 50 - 2 Amps - 115 Volts or 1 Amp 230 Volts
ATR 100B - 3 Amps - 115 Volts or 1.5 Amps 230 Volts

D.C. Output Capability:

ATR MODEL	VOLTS	AMPERES	ATR MODEL	VOLTS	AMPERES
50	8	5	50B	16	2.5
	18	2.5		36	1.25
	32	1.5		64	.75
100	8	10	100B	16	5
	18	5		36	2.5
	32	3		64	1.5
250	8	25			
	18	12.5			
	32	7.5			

Constant Voltage Regulation:

Line Regulation is .01% + 2 Millivolts.
Load Regulation is .01% + 3 Millivolts.

Constant Current Regulation:

Line Regulation is .01% + 2 Milliamps.
Load Regulation is .01% + 3 Milliamps.

Ripple:
Constant Voltage - 1.0 Millivolts RMS (5.0 Millivolts peak to peak)

Constant Current - 5.0 Milliamps RMS

Stability:

.05% + 10 Millivolts after 30 minutes warm-up.

Temperature Coefficient: .02% + 400 Microvolts

Operating Temperature: 0 C - 40 C

Storage Temperature: -40 C to +85 C

Load Transient Recovery Time:

The output will recover within 15 millivolts in less than 50 microseconds for a 50% to 100% to 50% load change.

Resolution:

The voltage and current controls are 10 turn potentiometers.

Cooling:

All units are fan cooled and thermostatically protected. Air enters a sides and top of the unit and exits at the rear. Consequently no heat will be applied to other equipment above or below the power supply.

Size:

ATR Model	High	Width	Depth
50	5.75"	2.0625"	18.25"
64			
100/100B	5.75"	4.125"	18.25"
250	5.75"	8.500"	18.25"

Finish:

Front panel and top cover are painted light blue the markings are black.

Mounting:

The supply can be used two ways: Set on the bench and used as a laboratory supply or mounted in a 19" relay rack. When used in a rack two rack adaptors are available. One rack adaptor provides an angle iron support for the front and a cross beam to support the rear. The other rack adaptor has provisions to mounted chassis slides. Before rack mounting the feet and handle must be removed. They only have to be unscrewed from the chassis since the holes are tapped.

SECTION II
OPERATING INSTRUCTIONS

2.1 PREPARATION FOR USE

Unpacking

Carefully unpack unit saving all packaging material and enclosures. Before shipment, this instrument was inspected and found to be free of mechanical and electrical defects. When the unit is unpacked, inspected for broken knobs or connectors, that the external surface is not scratched or dented, meter faces are not damaged and that all controls move freely. Any external damage may be an indication of internal problems.

2.2 GENERAL OPERATION

The front panel surface contains all the controls and indicators necessary to operate the supply in its normal mode. The following

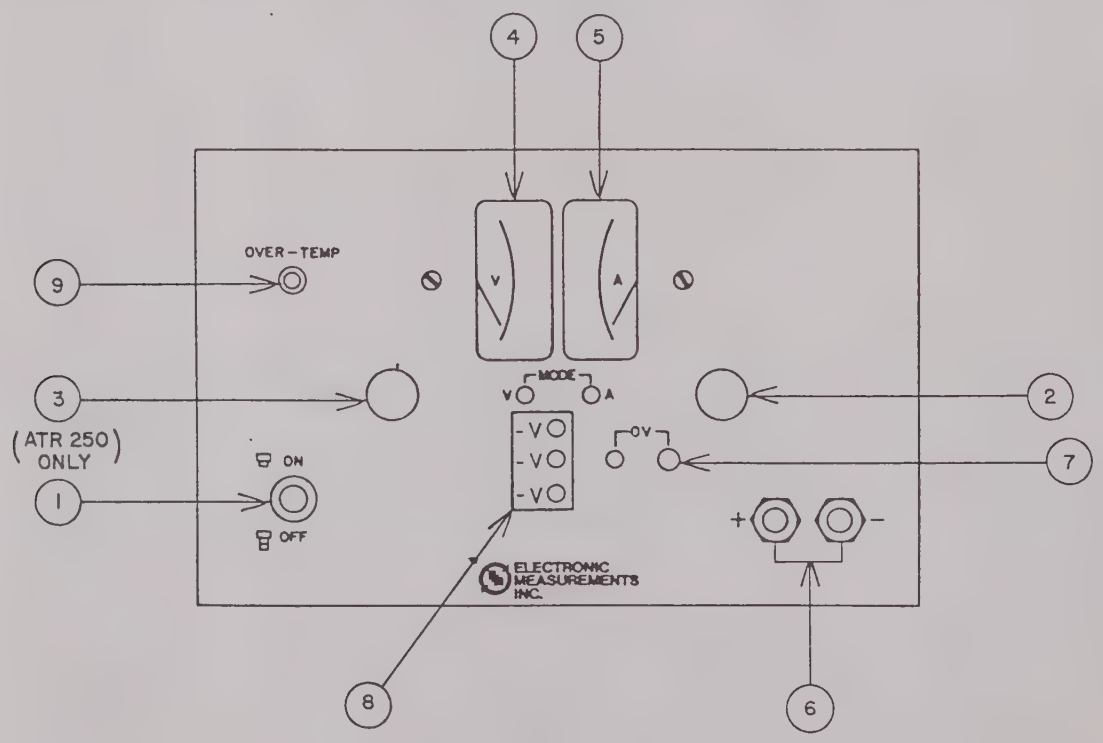

FIG A

checkout procedure describes the use of the front panel control and indicators Figure A and insures that the supply is operational. This preliminary check is done without a load connected to the power supply.

1. Check that the barrier jumper straps are as shown in Figure 1. for normal mode.

2. Set all controls to full counter clockwise.

3. Turn the circuit breaker on/off switch to off.

4. Connect the supply to a suitable source of ac voltage.

5. Turn the CIRCUIT BREAKER (1) on/off switch to "on". The fans should start immediately. There should be no output voltage or current.

6. Advance the CURRENT CONTROL(2) one turn clockwise and slowly advance the VOLTAGE CONTROL(3). The DC VOLTAGE METER(4) should deflect smoothly from zero to the rated current of the supply as this control is advanced to full clockwise.

7. Return all controls completely counter clockwise and turn supply off.

8. Connect a short circuit to the power output terminal block (TB1-2 & 4) on the rear panel or the front terminals (6).

9. Turn on/off switch to "on".

10. Advance VOLTAGE CONTROL one-half turn and slowly advance CURRENT CONTROL. The DC CURRENT METER(5) should deflect smoothly from zero to the rated current of the supply as this control is advanced completely clockwise. The LED indicators should flip from maximum voltage level (Yellow LED) to the mimimum level (Red LED). The middle range should be skipped (Green LED).

11. Return all controls completely counter-clockwise and turn supply off. Disconnect short circuit.

NOTE: Only the ATR 250 have a over-temperature LED (9). It will only be lit when a overtemperature fault occurs.

2.3 OVERVOLTAGE CHECK (7)

All supplys are equiped with overvoltage circuitry. A recessed screwdriver adjustment control sets the overvoltage trip point.

NOTE: All overvoltage circuitry has been properly adjusted to their respective unit before leaving the factory.

For trip levels less than the maximum output voltage or to check the overvoltage circuitry simply a. set the potentiometer fully clockwise, b. adjust the power supply output voltage to the desired trip level, c. slowly adjust the potentiometer counteclockwise until overvoltage is tripped.

Turning the unit off and then on again will reset the OVP provided the output is not adjusted above the trip point. The overvoltage range is from 50% to 100% of the maximum output voltage of the unit.

If any of the above events does not occur, the supply is defective and must not be operated. Depending on circumstances, either warranty service or troubleshooting as described elsewhere in this manual is required.

2.4 MODES OF OPERATION

The following paragraphs discuss the various standard and optional modes of operation built into the design of the power supply.

2.4.1 NORMAL MODE (Fig. 1)

When shipped from the factory, each supply is configured for local sensing and internal adjustment control. Normal mode of operation is usually used in most applications.

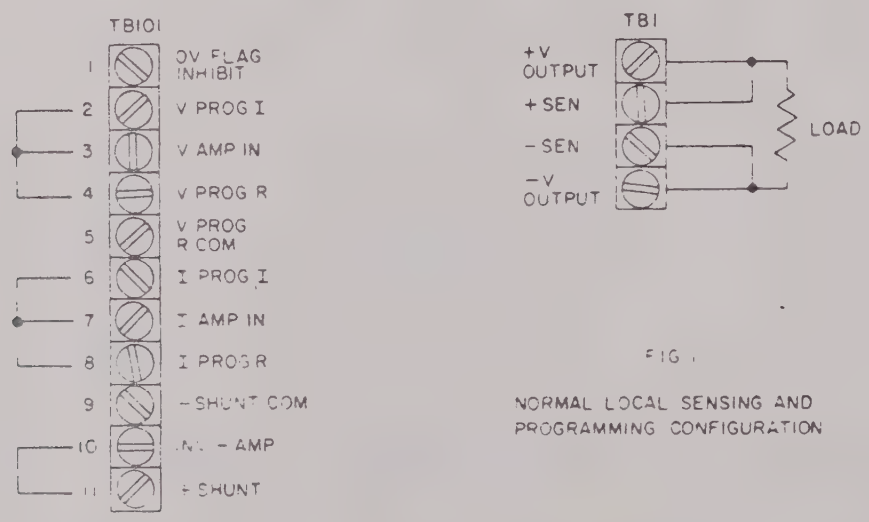

FIG. 1

NORMAL LOCAL SENSING AND PROGRAMMING CONFIGURATION

Local Sensing : Connect jumpers between -

TB1 +V OUTPUT & +SEN
TB1 -V OUTPUT & -SEN

This connects the point of voltage sensing of the internal control circuitry to power output terminals.

Internal or local Voltage and Current Control:

Connect jumpers between -

TB101 2-4
TB101 6-8

This connects the programming current source to the sensing amplifier input and the internal programming resistance.

2.4.2 REMOTE SENSING (Figure 2)

In applications where the effect of the voltage drop (IR) of the dc load wires would adversely effect the performance of the load it is possible to sense the voltage at the load instead of the output terminals of the power supply. Remote sensing will therefore remove the effect of changes in load current through the power distribution system. Permissible load line drop is 0.25 volts.

Connecting Load

Each pair of connecting wires must be as short as possible and twisted or shielded if strong ac or RF fields are present to reduce noise pickup. If a shielded pair is used, connect one end of the shield to ground at the power supply and leave the other end disconnected.

1. Disconnect barrier jumpers: TB1 +V OUTPUT & +SEN
   TB1 -V OUTPUT & -SEN

2. Connect the positive point of load to +SEN.

3. Connect the negative point of load to -SEN.

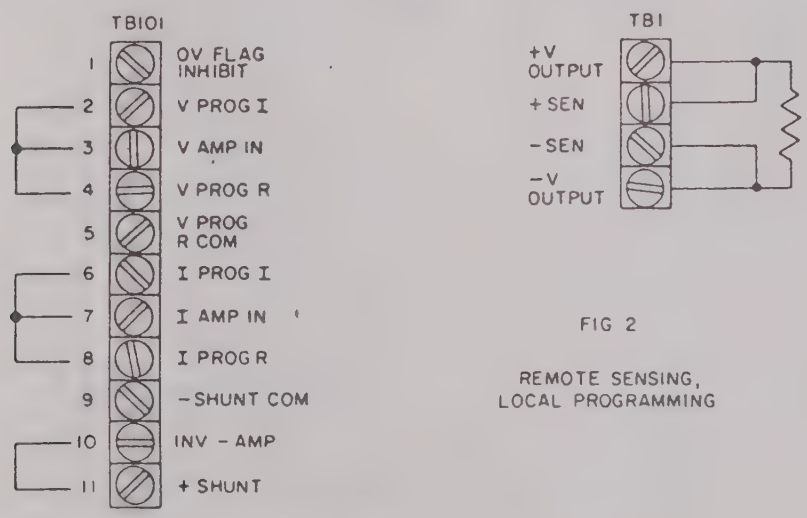

FIG 2

REMOTE SENSING, LOCAL PROGRAMMING

2.4.3 REMOTE PROGRAMMING

The supply may be operated in a remotely programmed mode (externally controlled) by the use of external resistance, voltage or current control.

NOTE: The power supply will safely shut down if it is programmed to voltage levels greater than the over voltage set point.

2.4.3.1 REMOTE PROGRAMMING, EXTERNAL RESISTANCE (Fig. 3)

Voltage Channel

1. Disconnect barrier jumper between TB101-3 and 4.

2. Connect the external programming resistance between terminals TB101-2, 3 and 5.

The programming resistance is 5000 ohms for full rated voltage output. For any voltage output within the range of the supply:

Prog (OHMS) = DESIRED VOLTAGE/FULL RATED OUTPUT x 5000

Current Channel

1. Disconnect barrier jumper between TB101-7 and 8.

2. Connect programming resistance between terminal 6, 7 and terminal 9.

The programming resistance for full rated output is 1000 ohms. For any current within the range of the supply:

Prog (OHMS) = DESIRED VOLTAGE/FULL RATED OUTPUT x 1000

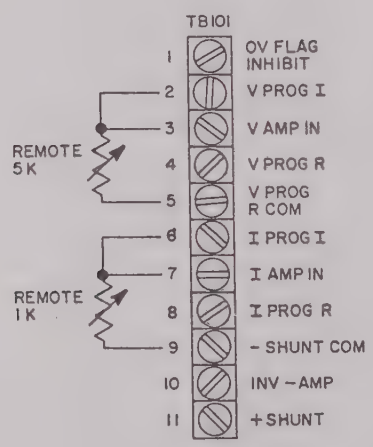

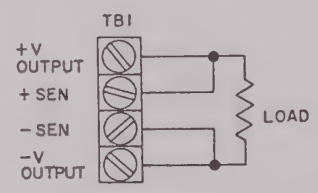

FIG. 3

REMOTE SENSING AND REMOTE RESISTANCE PROGRAMMING

2.4.3.2 REMOTE PROGRAMMING, EXTERNAL VOLTAGE (Fig. 4)

Voltage Channel

A programming source of 0 to 5 volts drives the supply from zero to full rated output voltage. This source must float with respect to the output of the supply unless local sensing is used.

1. Remove barrier jumpers between 2,3, and 4 on TB101.

2. Connect the source of voltage programming between TB101 terminal 3 (positive) and terminal 5 (negative).

Current Channel

The programming signal for zero to full output current is 0 to 1.0V volt. A signal from a higher potential source may be attentuated to this 1 volt level by a resistor divider. For best performance, the souce impedance of this divider should not exceed 1000 ohms.

1. Remove barrier jumpers between 6,7, and 8 on TB101.

2. Connect the programming source between TB101 terminal 7 (positive) and terminal 9 (negative). The programming signal for zero

NOTE: The negative end of the voltage and current channel programming terminals are common.

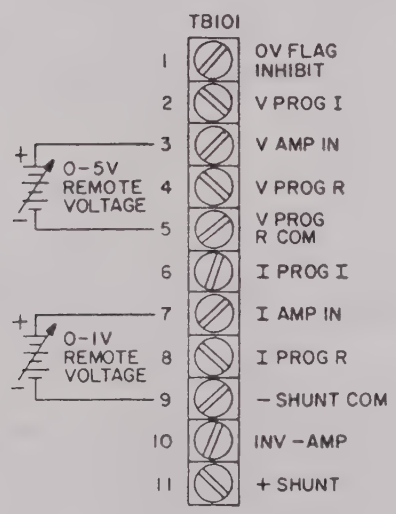

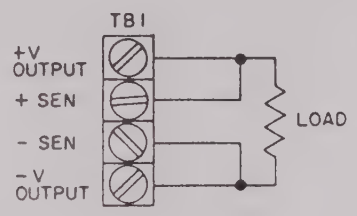

FIG 4

REMOTE VOLTAGE CONTROL OF VOLTAGE AND CURRENT CHANNEL

2.4.3.3 REMOTE PROGRAMMING, EXTERNAL CURRENT

Voltage Channel

A current of 0 to 1Ma programs the supply from zero to full voltage output.

1. Remove the barrier jumper between 2 and 3 on TB101.

2. Connect the positive terminal of the current source to terminal 3,4 and the negative terminal to terminal 5.

3. The voltage adjust control must be completely clockwise.

Current Channel

1. Remove the barrier jumper between 6 and 7 on TB101. A current of 0 to 1Ma programs the supply from zero to full voltage output.

1. Remove the barrier jumper between 6 and 7 on TB101.

2. Connect the positve terminal of the current source to TB101 terminal 7,8 and the negative terminal to terminal 9.

3. The current adjust control must be completely clockwise.

2.4.4 PARALLEL OPERATION

The ATR Series Power Supply are equipped with provisions for parallel operation.

2.4.4.1 PARALLEL OPERATION - DIRECT CONNECTION

The simplest parallel connection is that of attaching the positive and negative terminal to their respective load points. The following procedure should then be followed.

1. Set all supplies to the appropriate output voltage (open circuit).

2. Turn supplies off and connect load.

3. Set the current limit to maximum.

4. Turn on supplies one at a time until the sum of the supply current capability exceeds the amount of load current.

5. Balance the current of each unit for equality.

In order to prevent a unit from carrying an excessive amount of load current due to an increase in voltage, set the current limit above the running current.

2.4.4.2 PARALLEL OPERATION - MASTER/SLAVE (Fig. 5)

In this configuration, the power supply, the power supply designated the master is used to control the voltage and current operation of all other supplies, referred to as slaves. It is not recommended to operate more than three ATR power supplys without thorough evaluation from the Engineering Department of Electronic Measurement Inc. This will help avoid any failures in the application because of instability of the power supplys.

NOTE: The output leads from each power supply must be of equal length to the load point to assure equal sharing

FIG. 5

PARALLEL OPERATION - MASTER/SLAVE

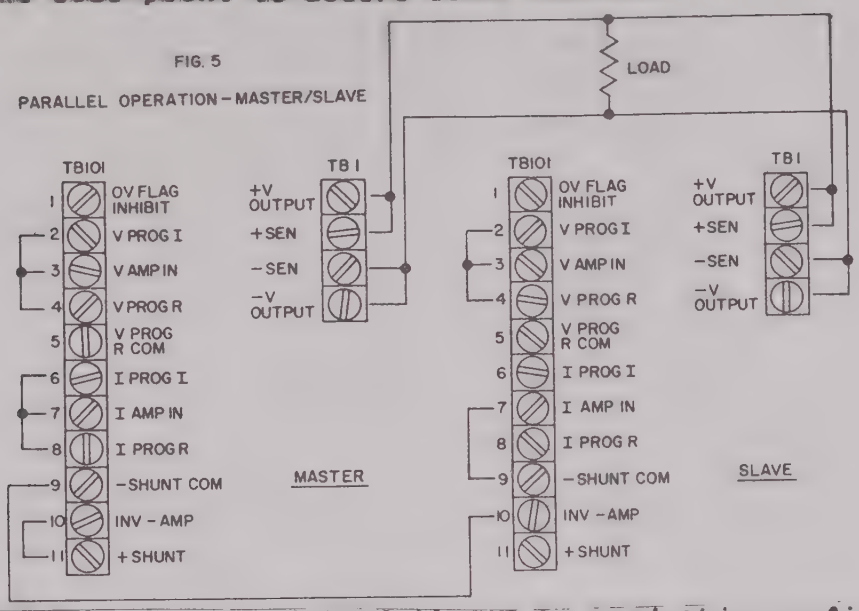

The following procedure must be followed to used this configuration:

ALL Slaves

1. On TB101, remove barrier jumpers 10 to 11 and also 6, 7 and 8.

2. Connect a barrier jumper between 7 and 9.

Connections

3. Connect 9 of the "master" to 10 of each "slave".

4. Adjust the "master" for the required output voltage or current.

2.4.5 SERIES OPERATION

Two or more may be operated in series by connecting the negative of one supply to the positive of another. Each units adjustment functions independently and the output is the sum of each unit output. The voltage at any output terminal must never exceed 600V with respect to chassis ground.

NOTE: Consult Electronic Measurements, Inc. Engineering Department for series operation of more than two supplys.

2.4.5.1 SERIES OPERATION - MASTER/SLAVE (Fig. 6)

The "master" unit becomes the reference for the "slave" unit.

1. Disconnect barrier jumpers between TB101 2,3 and 4 on the "slave".

"slave".

2. Connect barrier jumper between TB101 3 and 4 of the "slave".

3. Connect the +V OUTPUT of the "master" to the load and through a reference 27.4K resistor to TB101 3 and 4 of the "slave".

4. Connect the -V OUTPUT of the " master" to the +V OUTPUT of the "slave".

5. Turn "slave" voltage and current front panel controls to maximum.

6. Turn " master" unit controls completely clockwise.

7. Turn on the "slave" then the "master".
   sense of master to the jumpered links TB101-3 and 4 of the slave.

   4. Slave voltage and current controls are turned to maximum, with master current control turned up.

   5. The voltage control forces the slave to track. (see fig. 6)

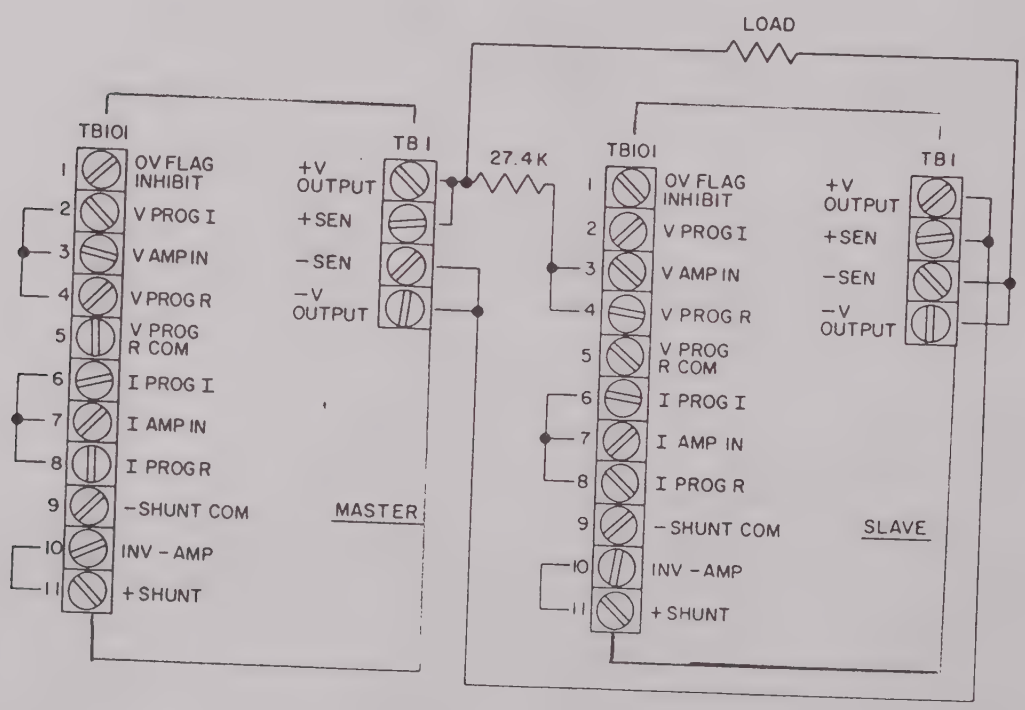

FIG 6

SERIES OPERATION - MASTER/SLAVE

SECTION III
PRINCIPLES OF OPERATION

3.1 GENERAL

The ATR Series Power Supplys yield a constant output voltage utilizes a linear series pass system which is traic controlled. The series pass regulators eliminate both line harmonic ripple and the slower dc variations proportional to line changes.

This section discusses the basic theory of power flow and the operate of the A100 and A200 Printed Circuit Boards which is essentially the signal flow. If used as a supplement to the maintenance data provided in Section IV, it will aid in isolation of unit faults. Refer Figure 7, the power and signal flow plus the following schematics:

#01-265-000 for the ATR 100,
#01-265-001 for the ART 250,
#01-265-002 for the ATR 64.

3.2 POWER FLOW CIRCUITRY

Explanation of the power flow is as follows: At turn-on a single phase ac input passes through circuit breaker CB1 to step-down transformer, T1. The voltage from the transformer secondary is converted to dc by two bridge rectifiers (CR1 + CR2) which operate in conjuction with traics Q1 and Q2. This dc voltage is filtered by a high value electolytic capacitor C1 and C2 (were applicable). The out put is kept constant by the series pass transistor system which consists of a number of paralleled transistors acting as a varible resistance device (Depending upon the unit Q103-105 or Q105 an Q103-Q110)

As the input rises or falls, the effective resistance of the series element increases or decreases so that it, rather than the output load, absorbs the input by the negative-feedback loop composed of the resistor sampling shunt, the difference amplifier and voltage/current amplifier-level shifter element. The drive for the series pass transistors are Q104 and Q105 or Q105 and Q307 depending on the unit which are controlled by Q106. The collector voltage of Q106 is taken from the +15 volt internal supply.

The linear amplifier section is thermostatically protected by TS1 or TS301 (depending upon the unit) which is located on the A300 assembly If this section overheats the normally open thermostat closes forcing a positive voltage to the base of Q106. The conduction of Q106 halts the series regulators output.

3.3 A100 PRINTED CIRCUIT BOARD

The A100 Board contains the voltage and current comparators, precise current reference, and depending on the unit the series pass transistors.

There is automatic switching between the voltage and current comparator amplifiers. Either the voltage or the current channel are in operation. They work in the following matter.

Voltage Channel

When the attentuated output at pin 2 of the voltage comparator IC3B is higher than the reference point, the output will be positive and is in control. The operation of the voltage channel is as follows: Q107 generates a stable 1 Ma. current which flows through the voltage control R5. This 1 MA will produce a voltage drop across R5 which is buffered in IC3A and fed to one input of the voltage channel comparator IC3B. The positive output voltage is attenuated to 5 volts maximum and fed into the other side of the voltage channel comparator. A feedback circuit in the loop causes the output voltage to be adjusted until the differential input to the comparator is zero. Therefore the output is proportional to the voltage across R5 the voltage control.

Current Channel

The current channel will be in control when the voltage across the shunt R301 and the voltage from current control R4 cause the output of IC103C pin 4 to be higher positive then the output of the voltage channel The current channel operates in the following manner: One side of the current channel comparator IC3C - pin 6 is connected to the output negative terminal. The other input is the sum of two voltages, the potential across the shunt R301 and the 1 Ma potential across R4 (this is from the reference). A feedback circuit in the loop drives the output level to the point of making these two voltages equal. This causes the voltage at pin 5 to be zero letting the negative voltage at pin 6 to be predominate producting a positive output voltage at pin 4.

If both comparator outputs are positive simultanelously, this will cause a positive voltage at the base of Q106. The activating of Q106 collector voltage will halt the output of the linear amplifier section.

Also on the A100 board is the control circuitry power supply. The ac if rectified by CR101, filtered by C101 and C102 and regulated by IC101 and IC102 which are + and - 15 volt regulators.

3.4 A200 PRINTED CIRCUIT BOARD

The A200 printed circuit board contains the overvoltage protection (OVP), voltage and current meter calibration resistors, and the

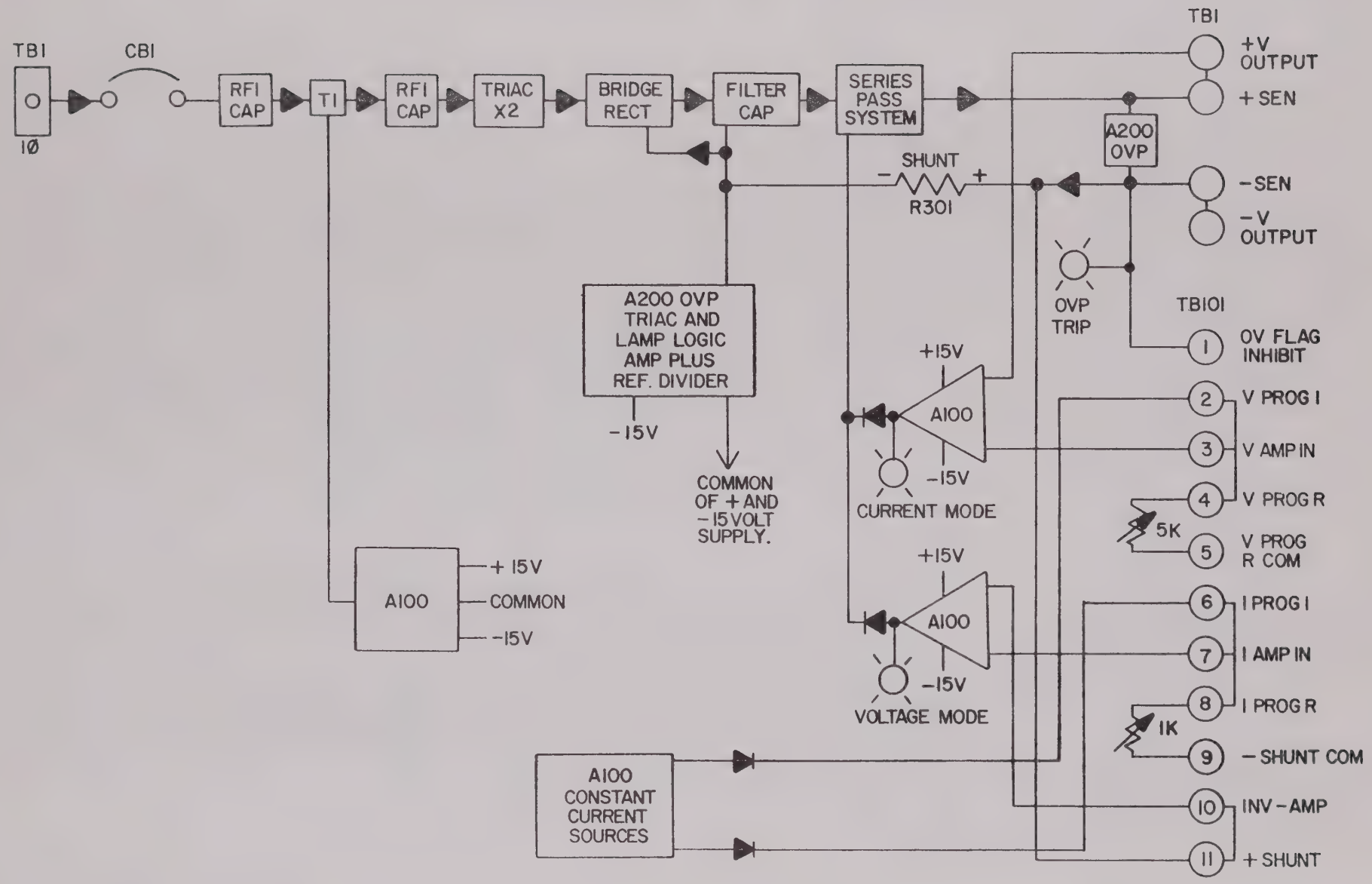
TB1
CB1
1Ø
RFI CAP
T1
RFI CAP
TRIAC X2
BRIDGE RECT
FILTER CAP
SERIES PASS SYSTEM
SHUNT
R301
A200 OVP
A200 OVP TRIAC AND LAMP LOGIC AMP PLUS REF. DIVIDER
-15V
COMMON OF + AND -15 VOLT SUPPLY.
A100
+ 15V
COMMON
-15V
+15V
A100
-15V
CURRENT MODE
+15V
A100
-15V
VOLTAGE MODE
A100 CONSTANT CURRENT SOURCES
TB1
+V OUTPUT
+ SEN
-SEN
-V OUTPUT
OVP TRIP
TB101
1 OV FLAG INHIBIT
2 V PROG I
3 V AMP IN
4 V PROG R
5K
5 V PROG R COM
6 I PROG I
7 I AMP IN
8 I PROG R
1K
9 - SHUNT COM
10 INV - AMP
11 + SHUNT

FIG. 7

automatic range control circuitry.

The OVP circuit consists of IC205 (MC3423U), and two silicon controlled rectifiers (SCR), Q201 and Q3 or Q303 (depending upon the unit IC205 compares the input at pin 2 to an internal reference. When pin 2 is above the reference point, Q201 will be triggered. This will shut down the linear amplifier chain and activate Q104. The Q104 throws a fast-acting short circuit across the output terminals which quickly removes any overvoltage. The overvoltage fault indicator, DS206 light-emitting diode also activates when Q201 is triggered.

The automatic range control circuit works in the following matter:

Traics Q1 and Q2 manipulate the serveral voltage ranches produced by transformer T1. These traics are controlled by two opto coupler/ isolators IC201 and IC202 which are located on the A200 board. The isolators are activated by NAND circuit logic from IC204 which is a voltage quad comparator. The voltage is sample across the shunt R301 and compared to a reference set by potentiometer R228 and R229. (Ref to Figure 8 - NAND circuit logic and truth table.)

The following chart shows the state of this control circuit at different voltage and current levels.

MODEL	VOLTAGE	CURRENT	Q1	Q2	IC201	IC202	ACTIVATE TAPS T1
50	0-8	3-5	OFF	OFF	OFF	OFF	TAPS 9 AND 10
100	0-8	5.5-10	(SAME AS ABOVE)				
100B	0-16	3-5	(SAME AS ABOVE)				
250	0-8	13-25	(SAME AS ABOVE)				
50	9-18	2-2.5	ON	OFF	OFF	ON	TAPS 9 & 10
100	9-18	3.5-5	(SAME AS ABOVE)				
100B	17-32	2-2.5	(SAME AS ABOVE)				
250	9-18	8-12	(SAME AS ABOVE)				
50	19-32	0-1.5	ON	ON	ON	ON	TAPS 9-14
100	19-32	0-3	(SAME AS ABOVE)				
100B	33-64	0-1.8	(SAME AS ABOVE)				
250	19-32	0-8	(SAME AS ABOVE)				

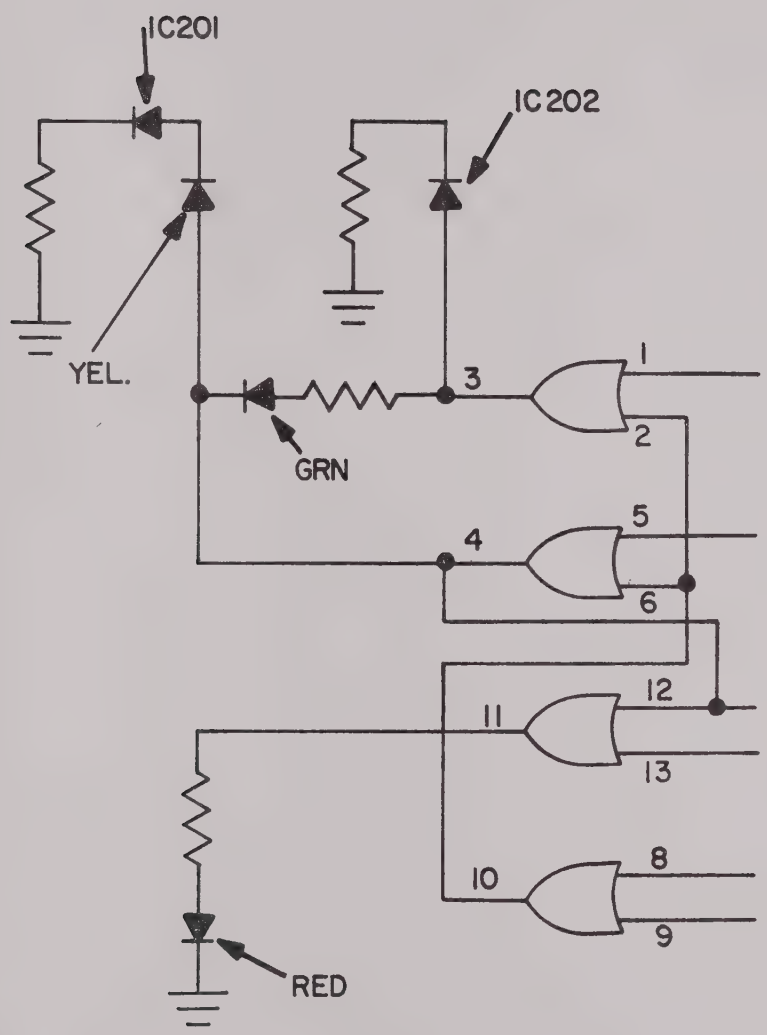

TRIAC AND LAMP LOGIC
PART OF A200 BOARD.

	INPUT	OUTPUT
32V	1 = L 2 = L	3 = H
	5 = L 6 = L	4 = H
	12 = H 13 = H	11 = L
	8 = L 9 = H	10 = L

18V	1 = L 2 = L	3 = H
	5 = H 6 = L	4 = L
	12 = L 13 = H	11 = L
	8 = L 9 = H	10 = L

8V	1 = H 2 = L	3 = L
	5 = H 6 = L	4 = L
	12 = L 13 = L	11 = H
	8 = L 9 = H	10 = L

FIG. 8

SECTION IV
MAINTENANCE AND TROUBLESHOOTING

4.1 GENERAL

Reviewing the Theory of Operation would be helpfull before trouble shooting the supply. The followingj test equipment is recommended: Source of ac power, means of loading the supply, an oscilloscope or digital multimeter.

The chart the follows is a trouble shooting guide that should aid in finding some of the operation problems in the supply.

WARNING: When servicing supply, dangerous voltage levels exist. Be especially careful of person and equipment when measuring primary circuitry since this is at line potential.

4.2 TROUBLE SHOOTING GUIDE

SYMPTOM	POSSIBLE CAUSE	REMEDY
1. Unit shuts off immediately when turned on.	Q1 or Q2 may be shorted.(ATR 250 Q301 or Q301)	Replace
	CR1 or CR2 may be may be shorted. (ATR 250 - CR301 or CR302)	Replace
	C1 shorted. (ATR 250 - C1 and C2)	Replace
	One of the transistors in the linear ampifier section.	Checking transistors: 1. Use 100 ohm 1 watt resistor. 2. Briefly touch the collectors of the series transistors. 3. If the transistor is good voltage will rise.
	ATR 50 Q101-103 ATR 54 Q101-103 ATR 100 Q101-103 ATR 250 Q304-310	
	Open Control	Replace

	Q201 could be shorted.	To Check: 1. Unplug P202 2. Reapply power. 3. Unit stays on. 4. Replace Q201.
2. OVP indicatior is on.	IC205 is defective	1. Turn unit off 2. Remove IC205 3. Reapply power unit is operating properly. 4. Replace IC205. 5. Unit is out of control.
	Q106 could be shorted.	Replace
3. Low output but supply seems to be functing.	IC103 could be defective.	Replace
	Q107 or Q108 could be defective	Check for 1 volt across R4 and 5 volts across R5.
	IC201 or IC201 could be defective.	Replace
	IC101 or IC102 could be defective.	Check for plus and minus 15 volts.
4. One or more voltage inoperable and led is out.	Led is open	Replace
	IC201 or IC202 is defective.	Replace
5. Unit stays in one range does not switch.	Led is shorted.	Replace
6. Unit is oscillating.	Capacitors C105-C107 could be defective.	Replace
7. Unit has high ripple.	C1 and C2(when applicable) is defective.	Replace
	C301 is defective	Replace

4.3 CALIBRATION

4.3.1 PROGRAMMING CALIBRATION

Resistors R122 and R124 are to provide approximately a 8% variation of the voltage and current channel programming current. Their adjustment depends on the requirements of the user. In local programming mode, the adjustmented should allow full output at or near maximum potentiometer rotation. For external resistance programming, they may be adusted for an exact programming constant.

4.3.2 ZERO OFFSET

When both voltage and current controls are fully counterclockwise the power output is nearly inhibited. At the factory, R154 is selected in test to slightly suppress output current into a short circuit.

4.3.3 VOLTAGE CALIBRATION

This calibration is done without a load on the power supply.

1. Connect digital multimeter to the + and - output sense leads.

2. Set the voltage control (R5) to maximum clockwise.

3. Adjust R122 until the digital multimeter reads 32 volts.

LED LIT	VOLTAGE PRESENT AT FILTERING CAP
yellow	45-50 volts dc
green	27-29 volts dc
red	16-18 volts dc

4.3.4 CURRENT CALIBRATION

This calibration is done without a load on the power supply.

1. Connect a short across the + and - terminals on the front panel.

2. Set current control (R4) to maximum clockwise.

3. Connect meter to sense leads of shunt (E304 and 305).

4. Adust R124 for 1 volt across the shunt.

5. If the ammeter does not read 10 amperes when the shunt reads 1 volt, adjust R230 on the A200 Board.

4.3.5 AUTOMATIC RANGE CALIBRATION

RESISTIVE LOAD VALUE

ATR 50			ATR 100B		
VOLT	AMPS	RESISTOR	VOLT	AMPS	RESISTOR
8	5	1.6	16	5	3 2
18	2.5	7.2/6	36	2 5	14 4/13
32	1.5	21.3/16	64	1 5	42 6/36 4

ATR 100			ATR 250		
VOLT	AMPS	RESISTOR	VOLT	AMPS	RESISTOR
8	10	.8	8	25	32
18	5	3.6/3.27	18	12.5	1 4/1 38
32	3	10.7/9.1	32	7.5	4 27/4

1 Connect maximum level of resistive load L3 to the output terminal of the power supply.(Consult Resistive Load Chart for the proper values at each range. A variable load would be handy when doing this this test.)

2 Adjust R228 to have yellow led on at maximum ampere of this range and off at .5 amps above maximum (The load must be decreased to lower resistance shown on chart)

Example: Unit ATR 100 Yellow Led on a 3 Amps and off at 3.5 Amps

3 Connect maximum level of resistive load L2 to the output terminals of the power supply.

4 Adjust R229 to have green led on at maximum ampere of this range and off at .5 amps above maximum. (The load must be decreased to lower resistance shown on the chart)

5. Adjust the load so voltage is below 5 volts. Adjust R224 which is the minimum voltage adjustment to skip the 18 volt range as the load is varied from minimum to maximum current range of the unit

6. Turn unit off and turn voltage and current controls completely CCW.

7 Remove load.

4.3.6 OVERVOLTAGE ADJUSTMENT

1. Adjust OVP to completely CCW position. (This is a recessed adjustment through the front panel.

2. Turn unit on.

3. Slowly turn voltage up. It should not exceed 2.5 volts before tripping.

4. Turn unit off.

5. Adjust OVP to a completely CW position.

6. Turn unit on and set supply voltage to 18 volts.

7. Slowly start turning OVP CCW until supply trips.

8. Turn unit off.

9. Adjust OVP to a completely CW position.

10. Turn unit on and adjust voltage to 32 volts.

11. Slowly start turning OVP CCw unit supply trips.

12. Turn supply off and turn OVP completely CW. Turn the voltage control in the completely CCW position.

SECTION VI
PARTS LIST

5.1 GENERAL

This section contains a list of replacement parts for the ATR series power supply and names of typical manufacturers of such parts.

5.2 LIST OF MANUFACTURERS

The following list contains the key to the abbreviations in the Parts List, company name and address.

ABV	COMPANY NAME	COMPANY ADDRESS
AB	Allen Bradley	201 South 2nd Street Milwaukee, WI 53204
AMP	Amphenol	Distribution Marketing 2875 S. 25th Avenue Boardway, IL 60153
AP	Airpax	North American Phillips Cambridge Division Cambridge, MD 21613
AVX	AVX Corporation	Box 867 Myrtle Beach, SC 29577
BBC	Brown Boveri Corporation	500 Hadley Road S. Plainfield, NJ 07080
BO	Bourns	Trimpot Products Division 12 Columbia Avenue Riverside, CA 92507
BK	Beckman Instruments, Inc.	Helipot Division 2500 Harbon Boulevard Fullerton, CA 92507
BU	Bussman Manufacturing	502 Earth City Lane P.O. Box 14460 St. Louis, Missouri 63178
CDE	Cornell Dublier Elec. Co.	150 Avenue "L" Newark, NJ 07105
CR	Carlingswitch	505 New Park Place P.O. Box E West Hartford, CT 06110
CTS	CTS Keene, Incorporated	3230 Riverside Avenue Paso Robles, CA 93446

CU	Curtis Industries, Inc.	8000 West Tower Avenue Milwaukee, WI 53223
DA	Dale Electronic, Inc	Box 738 Columbus, NE 68601
EC	Electronic Concepts	P.O. Box 627 Eatontown, NJ 07724
EDI	Electronic Devices Inc.	21 Grayoak Avenue Yonkers, NY 10710
EL	Elna America Incorporated	Victoria Business Park 153E Savarona Way Carson, CA 90746
EM	Electronic Measurments, Inc	405 Essex Road Neptune, NJ 07753
EP	Empro Manufacturing Co, Inc	Box 26064 Indianapolis, IN 46226
ERD	Roederstein	2100 West Front Street Stateville, NC 28677
ETI	Electro Techniques, Inc.	215 Via Del Norte Oceanside, CA 92054
GE	General Electric	200 Main Street Clifton, NJ 07014
GO	Gould, Inc.	Control & System Division Springhouse, PA 19477
ICC	International Components Co	105 Maxess Road Melville, NJ 11746
IR	International Rectifier	233 Kansas Street El Sequndo, CA 90245
KE	Kemet, Union Carbide, Inc.	P.O. Box 5928
LC	Lee Craft Manufacturing	21-02 44th Road LI City, NY 11101
MA	Mallory Distribution Prod.	Box 1284 Indianapolis, IN 46206
ME	Mepco/Electra	P.O. Box 760 Mineral Wells, TX 76067
MO	Motorola, Inc.	Industrial Drive Riviera Beach, FL 33403
MX	Molex	2222 Wellington Court Lisle, IL 60532

NS	National Semiconductor	2900 Semiconductor Drive Santa Clara, CA 95051
PA	Pamotor	770 Airport Boulevard Bulingame, CA 94010
P+B	Potter and Brumfield	200 Richland Creek Drive Princeton, IN 47671
RCA	RCA	67 Walnut Avenue Clark, NJ 07066
RT	EG&G Rotron	Commercial Cooling Prod Shokan, NY 12481
SA	Sangamo Capacitor Division	Sangamo Weston, Inc. P.O. Box 128 Pickens, SC 29671
SI	Siemens Corporation	Colorado Components Div. 800 Hoyt Street Broomfield, CO 80020
SM	H&H Smith	812 Snodiker Avenue Brooklyn, NY 11207
SP	Sprague Products Company	60 Turner Street Walthan, MA 02154
TD	Therm-O-Disc Incorporated	1320 South Main Street Mansfield, Ohio 44907
TI	Texas Instruments, Inc.	6000 Denton Drive P.O. Box 5012 M/S:366 Dallas, TX 75222
TO	Torin Information Systems	Franklin Drive Torrington, CT 06790
WT	Weston	

5.3 RECOMMENDED SPARE PARTS LIST

NOTE: All components with multi listings vary with input of of units. Check schematic charts with variation listings for proper values.

CIRCUIT REF	DESCRIPTION	EM PART#	MFR PART NO.	MFR CODE
A100	PC Assembly ATR 100	20107000		EM
	PC Assembly ATR 100B	20107001		EM
	PC Assembly ATR 250	20165000		EM
A200	PC Assembly ATR 100	20108000		EM
	PC Assembly ATR 100B	20108001		EM
	PC Assembly ATR 250	20167000		EM
R4	POT 1K 10T 2W	67055002	850-10T-1K	ETI
R5	POT 5K 10T 2W	67055007	850-10T-5K	ETI
B1	Fan 115V 3.12" Sq.	51001001	A30473-10	TO
	Fan 115V 4 11/16" Sq	51006002	027119	RT
C1/2	Elec Cap 60KMfd 50V	54045004	CGS603U050X4C/F	MA
	Elec Cap 21KMfd 100V	54047001	CGS2134100X4C/F	MA
CB1	Circuit Brkr. 1P 3A	56053002	PP11-2-3.00A	AP
	Ckt. Brkr. 1P 7.5A	56053004	PP11-2-7.50A	AP
	Ckt. Brkr. 3P 1.5A	56054002	PP21-2-1.5A	AP
	Ckt. Brkr. 2P 4A	56054003	PP21-2-4.00A	AP
Q1/2	Triac 25A 600V	53008001	SC260M	GE
Q3	SCR 35A 600V	61001005	C35M	GE
Q101-3	Transistor	62005009	2N3055	RCA
	Transistor	62005017	2N3773	RCA
Q104	Transistor	62004001	2N3740	RCA

	Transistor	62004006	2N6420	RCA
Q301,2	Triac 200V 40A Stud	63008002	2N5443	MO
Q303	SCR 35A 600V	61001005	C35M 25S-SL	GE
Q304,5 6,8,9,10	Transistor TO66	62004003	2N3771	RCA
Q307	Transistor TO3	62005013	MJ2955	MO
M1	Basic I Meter	66062000	7511	WT
	Meter 0-5A	66062003	7511	WT
	Meter 0-10A	66062001	7511	WT
	Meter 0-25A	66062002	7511	WT
M2	Basic V Meter	66065000	7511	WT
	Meter 0-36V	66065001	7511	WT
	Meter 0-72V	66065002	7511	WT

5.4 ATR PARTS LIST

NOTE: All components with multi listings vary with input of of units. Check schematic charts with variation listings for proper values.

CIRCUIT REF	DESCRIPTION	EM PART#	MFR PART NO.	MFR CODE
R1	1K 2W 5% CARBON	67004013	HB1025	AB
	2.5K 5W 5% WW	67020041	CW5	DA
R4	POT 1K 10T 2W	67055002	850-10T-1K	ETI
R5	POT 5K 10T 2W	67055007	850-10T-5K	ETI
R101	Res. 100 ohm 1/2W	67002012	EB1015	AB
R102	Res. 220 ohm 1/2W	67002048	EB2215	AB
R103	Res. 1.2K 1/2W	67002019	EB1225	AB
R104	Res. 47 ohm 1/2W	67002006	EB4705	AB
R105	Res. 120 ohm 1/2W	67002018	EB1215	AB
R106	Res. 10 ohm 1/2W	67002001	EB1005	AB
R107	Res. 2.2K 1/2W	67002049	EB2225	AB
R108	Res. 22 ohm 1/2W	67002003	EB2205	AB
R112, R113	Res. 10K 1/2W	67002014	EB1035	AB
R114	Res. 1K 1/2W	67002013	EB1025	AB
R115	Res. 1.5M 1/2W	67002032	EB1555	AB
R116	Res. 1.5K 1/2W	67002029	EB1525	AB
R117	Res. 4.7M	67002078	EB4755	AB
R118	Res. 470 ohm 1/2W	67002074	EB4715	AB
R119	Res. 1.2K 1/2W	67002019	EB1225	AB
R120	Res. 1K 1/2W	67002013	EB1025	AB
R121	Res. 5.9K 1/8W	67005057	RN55	AB
R122	Trimpot 500 ohm 1/2W	67063002	72PLR	BK
R123	Res. 5.9K 1/8W	67005057	RN55	AB

R124	Trimpot 500 ohm 1/2W	67063002	72PLR	BK
R125 R126	Res. 1K 1/2W	67002013	EB1025	AB
R127	Res. 6.8K 1/2W	67002090	EB6825	AB
R128 R129	Res. 4.7K 1/2W	67002075	EB4725	AB
R130	Res. 27.4K 1/4W	67006039	RN60	AB
	Res. 54.9K 1/4W	67007056	RN65	AB
R131	Res. 4.99K 1/4W	67006053	RN60	AB
R132	Res. 2.2K 1/2W	67002049	EB2225	AB
R133	Res. 1.2K 1/2W	67002019	EB1225	AB
R134 R135 R136	Res. 100 ohm 1/2W	67002012	EB1015	AB
R201	Res. 1K 1/2W	67002013	EB1025	AB
R202	Pot 100K 2W	67054006	3852A-282-104A	
R203	Res. 6.98K 1/4W	67006062	RN60	AB
R204	Res 1K 1W	67003013	GB1025	AB
R205	Res. 1K 1/2W	67002013	EB1025	AB
R206	Res. 330 ohm 1/2W	67002064	EB3315	AB
R207	Res. 4.7K 1/2W	67002075	EB4725	AB
R208	Res. 1K 1/2W	67002013	EB1025	AB
R210	Res. 680 ohm 1/2W	67002089	EB6815	AB
R211	Res. 820 ohm 1/2W	67002094	EB8215	AB
R212	Res. 560 ohm 1/2W	67002084	EB5615	AB
R213	Res. 680 ohm 1/2W	67002089	EB6815	AB
R214 R219	Res. 10K 1/2W	67002014	EB1035	AB
R220	Res. 90.9K 1/4W	67006067	RN60	AB
R222	Res. 10K 1/2W	67002014	EB1035	AB
R223	Res. 2.2K 1/2W	67002049	EB2225	AB
R224	Pot 5K 1/2W	67063004	72PLR	BK

R225	Res. 120K 1/2W	67002021	EB1245	AB
R226	Res. 22K 1/2W	67002050	EB2235	AB
R227	Res. 8.2K 1/2W	67002095	EB8225	AB
R228 R229	Trimpot 200 1/2W 3P	67063001	72PLR	BK
R230	Trimpot 500 1/2W 3P	67063002	72PLR	BK
R231	Res. 698 ohm 1/4W	67006083	RN60	AB
R232	Res. 35.7K 1/4W	67006089	RN60	AB
R233	Res. 33K 1/4W	67001066	RN60	AB
R234	Res. 130K 1/4W	67001026	RN60	AB
R301	Res. .04 ohm 55W 4Ld	67065002	FHS-55	EL
	Res .01 ohm 50W	67065001	FHS50	EL
	Res. 1 ohm 3W	67019001	CW-3	DA
R302	Res. WW 250 ohm 5W	67020040	CW-5	DA
R303,4 5,6,7,8	Res. WW 0.2 ohm 5W	67020004	CW-5	DA
R309	Res. WW 0.2 ohm 10W	67022004	CW-10	DA
B1	Fan 115V 3.12" Sq.	51001001	A30473-10	TO
	Fan 115V 4 11/16" Sq	51006002	027119	RT
C1/2	Elec Cap 60KMfd 50V	54045004	CGS603U050X4C/F	MA
	Elec Cap 21KMfd 100V	54047001	CGS2134100X4C/F	MA
C2	Cap 2Mfd 240V	54063011	DMMABW2	CDE
C3	Cap .47Mfd 250V	54066001	1773477-25	ERO
C4	Cap 2Mfd 240V	54063011	DMMABW2	CDE
C101 C102	Cap 1000Mf 50V	54032013	DDA100uF50V	ICC
C103 C104	Cap 100MF 25V	54026003	DDA100uF25V	ICC
C105	Cap .005MF 1000V	54003004	TG510	SP
C106	Cap .047MF 100V	54006007	MKT181334/255	

C107	Cap .01MF 100V	54002002	C023B101F103M	SP
C108	Cap 0.1MF 100V	54002001	SR211E104MAA	
C109	Cap .02MF 100V	54002003	GH2237	MA
C110	Cap 470PFD 500V	54024002	PD470M500	ICC
C111	Cap .01MF 100V	54002002	C023B101F103M	SP
C112 C113	Cap 100PFD 1000V	54003005	CM05F101J03	CDE
C114	Cap 1MF 100V	54006001	KTI83241001	ERO
C201	Cap Disc 0.1MF 100V	54002001	SR211E104MA	AVX
C202	Cap Elec 10MF 50V	54025001	TDB10MF25V	ICC
C203 C204	Cap Disc .01MF 100V	54002002	TG510	SP
C205	Cap Elec 10MF 50V	54025001	SM50VIO	ICC
C301	Cap Elec 100MF 50V	54032003	T50T100	EL
CB1	Circuit Brkr. 1P 3A	56053002	PP11-2-3.00A	AP
	Ckt. Brkr. 1P 7.5A	56053004	PP11-2-7.50A	AP
	Ckt. Brkr. 3P 1.5A	56054002	PP21-2-1.5A	AP
	Ckt. Brkr. 2P 4A	56054003	PP21-2-4.00A	AP
E1	Binding Post Red	72033002	DF30RC	SM
E2	Binding Post Black	72033000	DF30BC	SM
CR1,2	FWB 30A 600V	60028001	PW60	QE
CR101	FWB 200V 1.5A	60023001	W02M 4LD-250DIA	GI
CR102	Diode 4.7V	60001019	1N4732A AX	MO
CR103 - CR114	Diode 600V 1A	60006001	1N4005 AX	QE
CR113	Diode Zener 6.2V	60003002	1N823A AX	MO
CR201	Diode Zener 12V	60001004	1N4742A-AX	MO
CR202,3 CR204,5	Diode 600V	60006001	1N4005-AX	QE

CR301,2	FWB 200V 50A	60025003	KBPC50-02	EDI
IC101	+15 Voltage Reg	64010002	MC7815C	MO
IC102	-15 Voltage Reg	64010003	MC7915C	MO
IC103	Int Ckt 14 Pin Dip	64003001	RC4136DP	TI
IC201,2	Int Ckt	64008001	MOC 3010	MO
IC203	Int Ckt 14 Pin	64003011	MC14001CP	MO
IC204	Int Ckt	64003015	MC 3302	MO
IC205	Int Ckt 8 Pin DIP	64002004	MC3423U	MO
Q1/2	Triac 25A 600V	53008001	SC260M	GE
Q3	SCR 35A 600V	61001005	C35M	GE
Q101-3	Transistor	62005009	2N3055	RCA
	Transistor	62005017	2N3773	RCA
Q104	Transistor	62004001	2N3740	RCA
	Transistor	62004006	2N6420	RCA
Q105	Xistor Signal NPN	62002004	2N3053	RCA
	Xistor Signal NPN	62002005	2N3440	RCA
Q106	Transistor TO18 PNP	62001002	2N2222A	MO
Q107 Q108	Xistor Signal NPN	62001001	2N2907A	MO
Q201	SCR 0.8A 100V 3 lead	61006002	2N5062	GE
Q301,2	Triac 200V 40A Stud	63008002	2N5443	MO
Q303	SCR 35A 600V	61001005	C35M 25S-SL	GE
Q304,5 6,8,9,10	Transistor TO66	62004003	2N3771	RCA
Q307	Transistor TO3	62005013	MJ2955	MO
J101	PC Base Connector	72003003	2391-4A	MX
J102	PC Base Connector	72003006	2391-10A	MX
J103	PC Base Connector	72003004	2391-5A	MX
J201	Connector 10Ckt Male	72094006	09-75-1108	MX

J202	Connector 5Ckt Male	72094004	09-75-1058	MX
T1	Transformer ATR 100	28002080		EM
	Transformer ATR 100B	28002176		EM
	Transformer ATR 250	28002176		EM
M1	Basic I Meter	66062000	7511	WT
	Meter 0-5A	66062003	7511	WT
	Meter 0-10A	66062001	7511	WT
	Meter 0-25A	66062002	7511	WT
M2	Basic V Meter	66065000	7511	WT
	Meter 0-36V	66065001	7511	WT
	Meter 0-72V	66065002	7511	WT
TS1	Thermostat 195'C	68001001	36T22 Style1225	TD
DS201,2 DS205	RED LED	63004001	MV5023	LC
DS203	YELLOW LED	63004003	L101DY	LC
DS204	GREEN LED	63004002	L101DG	LC

SCHEMATIC DIAGRAMS

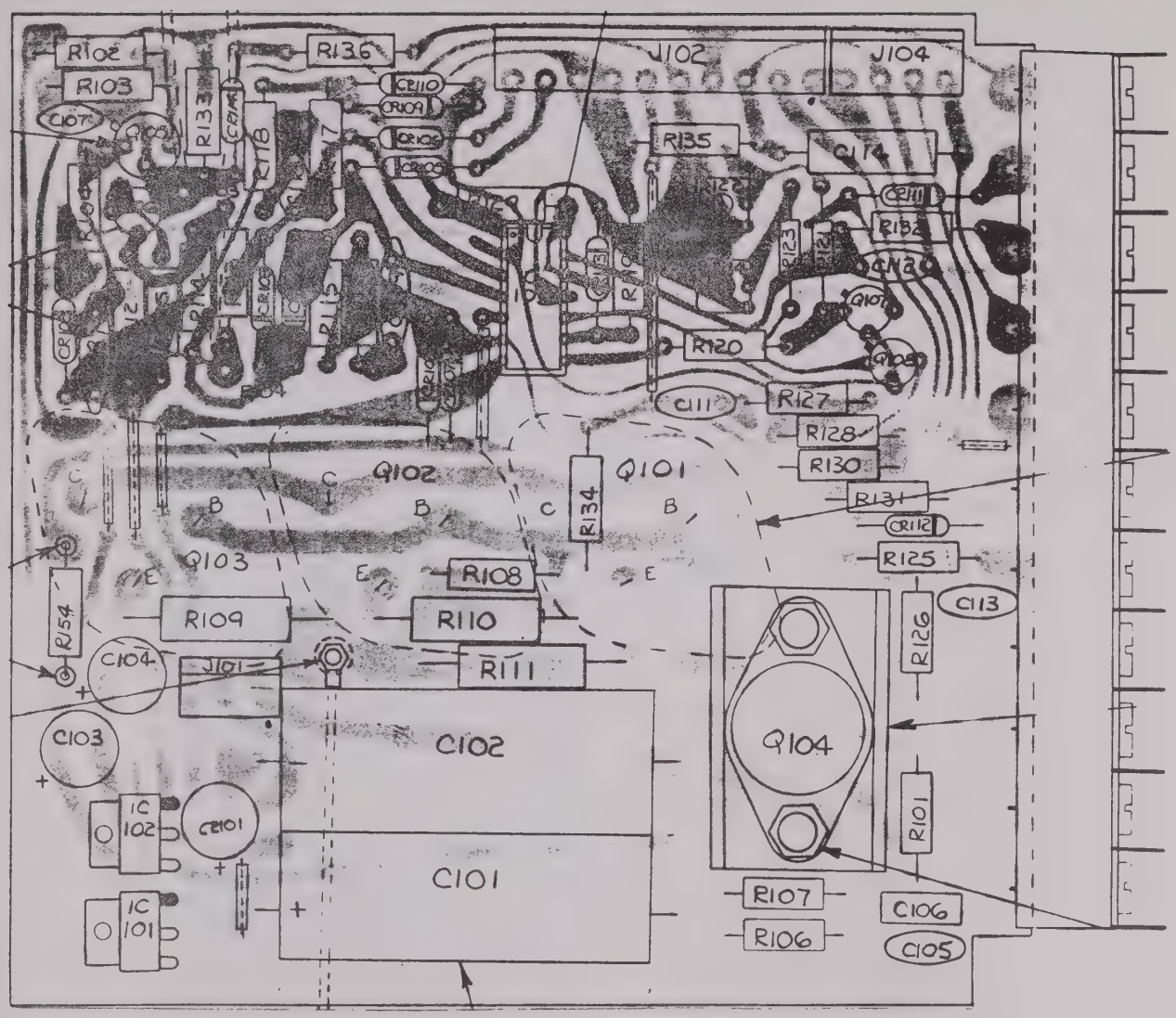

ATR A100 PRINTED CIRCUIT BOARD

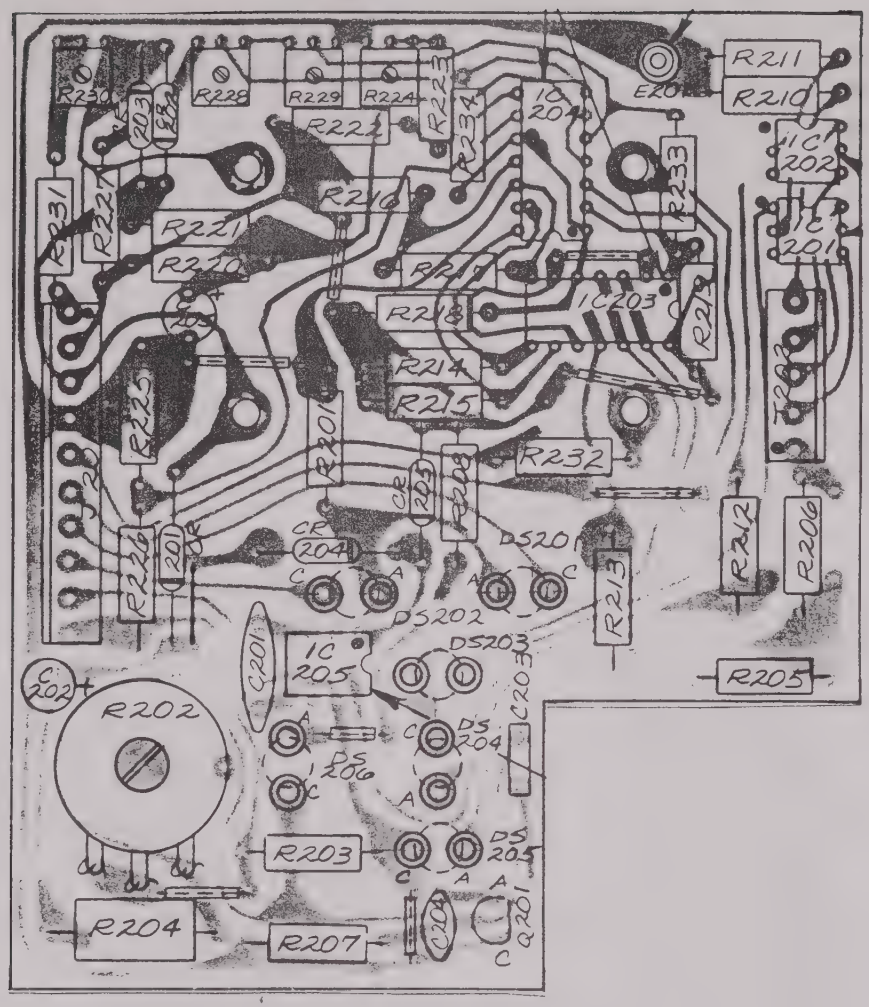

ATR A200 PRINTED CIRCUIT BOARD

APPLICATION			LTR	ECO NO	BY	APP
USED ON	NEXT ASSY	QTY	F	REV C1 50 TO 60KMF	RW	
ATR-100						
			E	REV R203 3-8-83	RW	

01-465-000

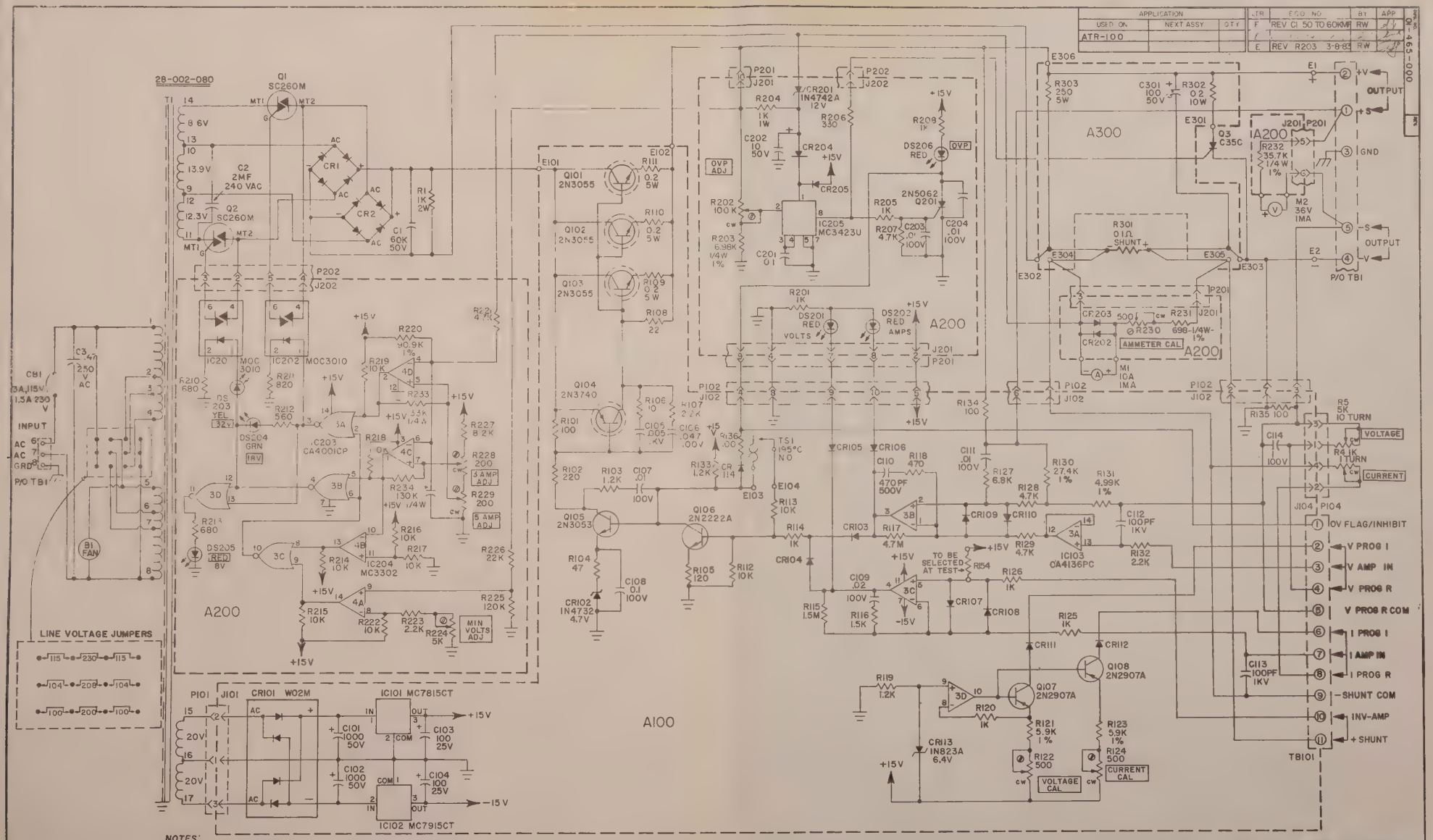

NOTES:

1. ALL RESISTORS ARE OHMS, 1/2W, 5% UNLESS OTHERWISE SPECIFIED.
   ALL DIODES ARE IN4003, UNLESS OTHERWISE SPECIFIED.
   ALL CAPACITORS ARE IN MICROFARADS, UNLESS OTHERWISE SPECIFIED.
2. ☐ DENOTES EQUIPMENT MARKING.
   ⊘ DENOTES SCREWDRIVER ADJUST.

MTL: —	TOL: XX = ± .02", XXX = ± .005", ANGLES ± 1/2°	DWN: 3/21/81	ELECTRONIC MEASUREMENTS INCORPORATED
FIN: —	P/L: 465	CHK: 3/21/81	TITLE: SCHEMATIC DIAGRAM ATR-100
	SCALE: NONE	ENG: 9/24/81	DWG NO: 01-465-000 F
		APP: 1/2/81	SHEET 1 OF 1

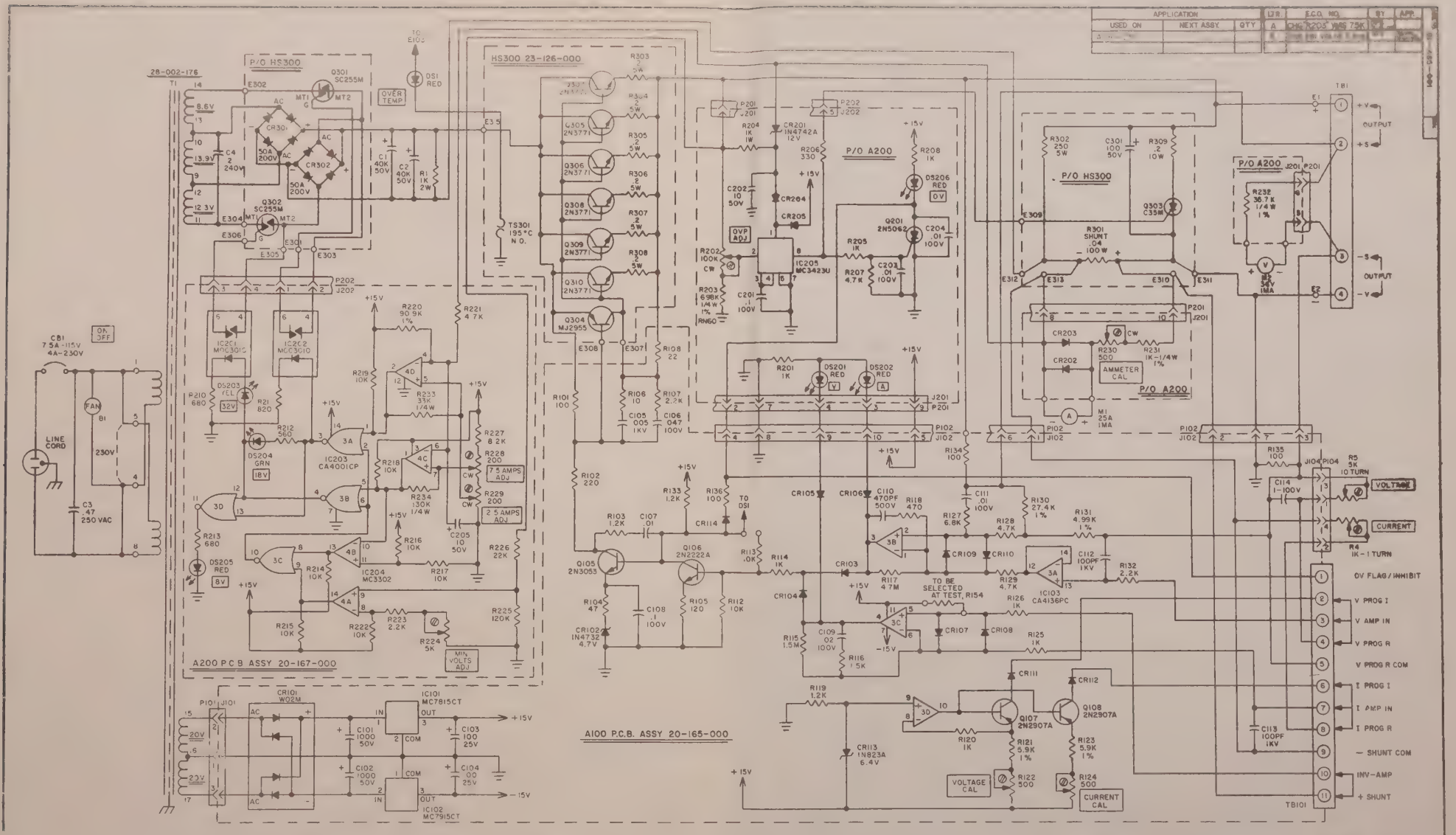

NOTES:

1. UNLESS OTHERWISE SPECIFIED;
   ALL RESISTORS ARE IN OHMS AND ARE 1/2W, 5% CARBON COMP
   ALL DIODES ARE 1N4003.
   ALL CAPACITORS ARE IN MICROFADS; K=1,000 M=1,000,000.
2. ▭ DENOTES EQUIPMENT MARKING.
   ⊘ DENOTES SCREWDRIVER ADJUST.

MTL	TOL: .XX = ± .02" .XXX = ± .005" ANGLES ± 1/2°	DWN: ME DATE: 2-25-83	ELECTRONIC MEASUREMENTS
		CHK: GFS DATE: 2-25-83	TITLE: SCHEMATIC DIAGRAM ATR 250 1/2 RACK
FIN:	P/L: 465	ENG: DATE:	
	SCALE:	APP: DATE: 3/14/83	DWG NO. 01-465-001 SH. 8

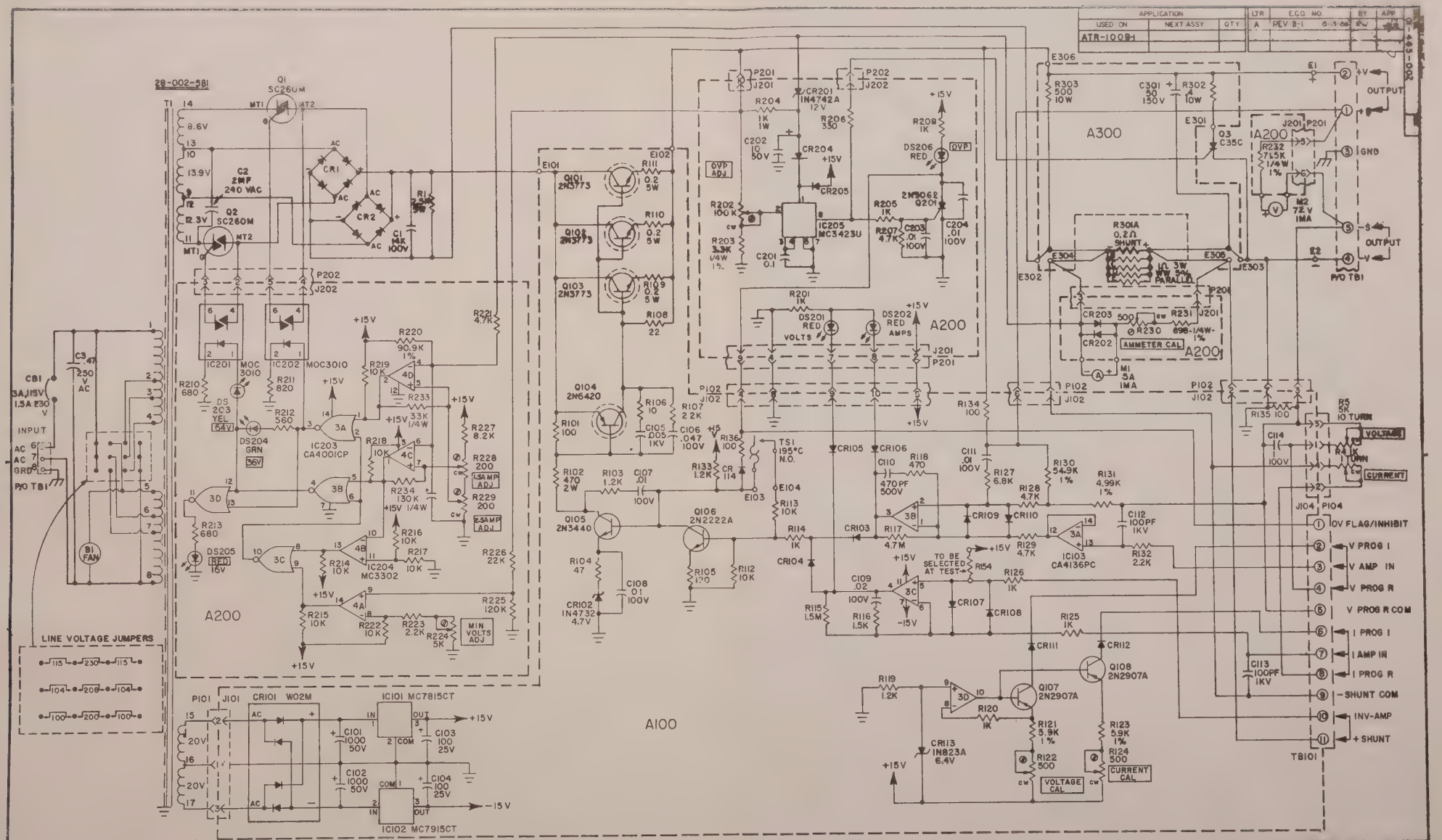

NOTES:

1. ALL RESISTORS ARE OHMS, 1/2W, 5% UNLESS OTHERWISE SPECIFIED.
   ALL DIODES ARE 1N4003, UNLESS OTHERWISE SPECIFIED.
   ALL CAPACITORS ARE IN MICROFARADS, UNLESS OTHERWISE SPECIFIED.
2. ☐ DENOTES EQUIPMENT MARKING.
   ⊘ DENOTES SCREWDRIVER ADJUST.

APPLICATION			LTR	ECO NO	BY	APP
USED ON	NEXT ASSY	QTY	A	ABO LINE CORD	ME	

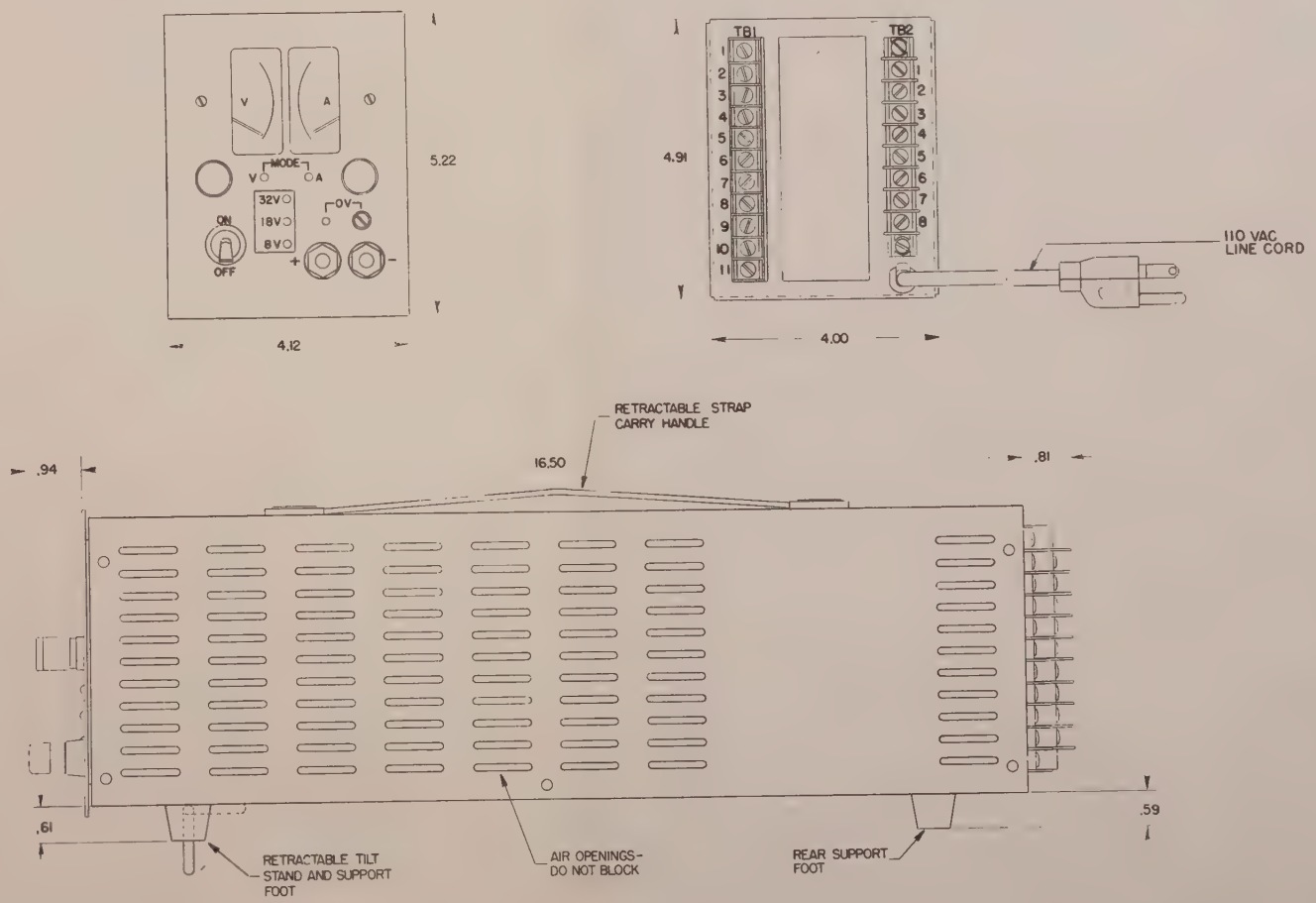

MTL:	TOL .XX = ± .02" .XXX = ± .005" ANGLES ± 1/2"	DWN BJC DATE 7-21-81	ELECTRONIC MEASUREMENTS INCORPORATED	
FIN:	P/L 465	CHK DATE 7/31/81	TITLE DIMENSIONAL OUTLINE ATR 100 QUARTER RACK	
	SCALE 1"=1"	ENG DATE	DWG NO 02-465-001	REV A
		APP DATE		

APPLICATION			LTR	E.C.O. NO.	BY	APP.
USED ON	NEXT ASSY.	QTY.				

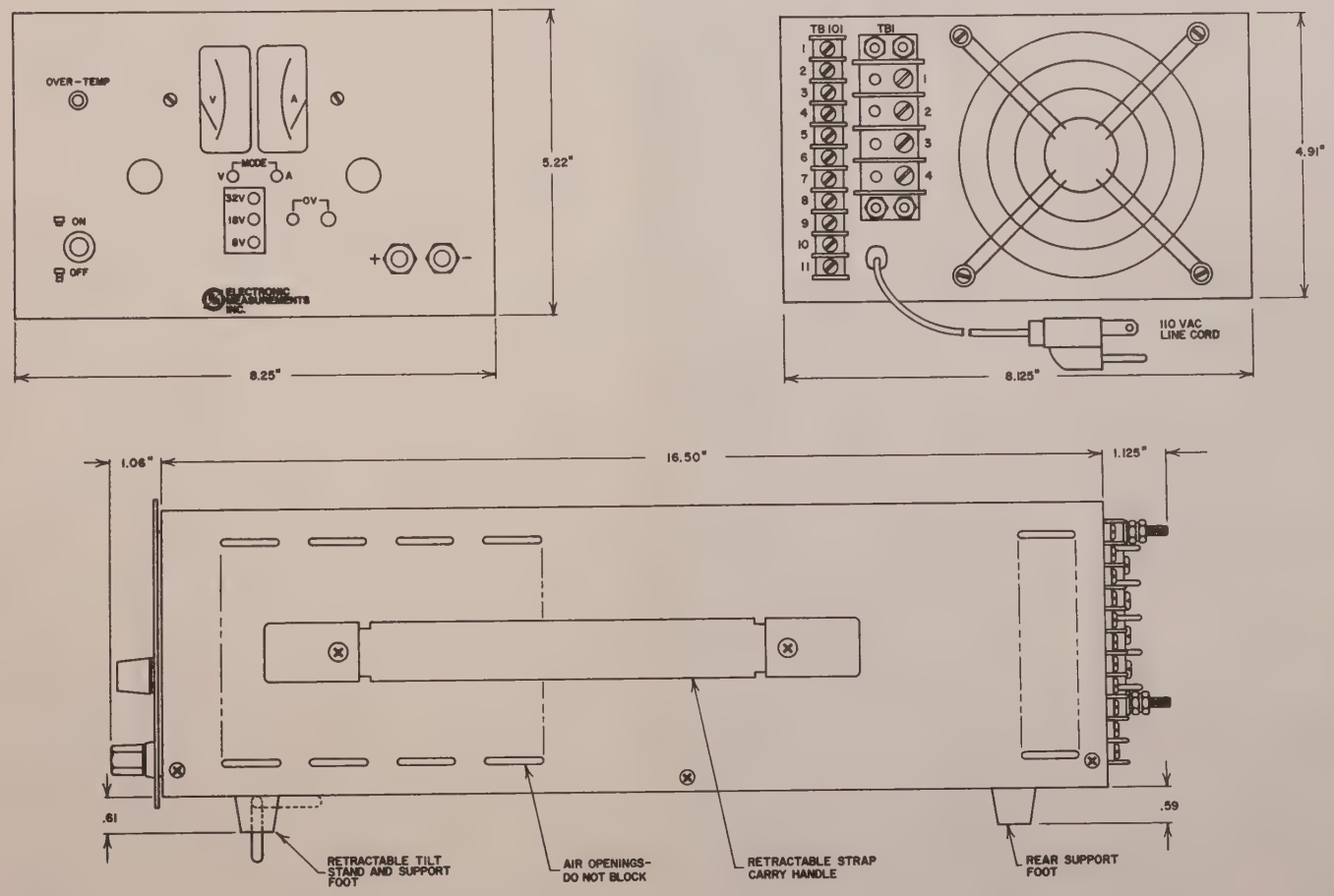

MTL:	TOL: .XX = ± .02" .XXX = ± .005" ANGLES ± 1/2"	DRN: BJC DATE: 2-18-83	ELECTRONIC MEASUREMENTS INCORPORATED	
		CHK: GFS DATE: 2-18-83	TITLE: DIMENSIONAL OUTLINE ATR 250	
FIN:	P/L 465	ENG: DATE:		
	SCALE: NONE	APP: DATE: 3/14/83	DWG NO. 02-465-003	REV
			SHEET 1 OF 1	

1. UNPACK & CHECK PARTS AGAINT LIST BELOW.
2. INSTALL 1-4 POWER SUPPLIES BY HOOKING BOTTOM GROOVE OVER LOWER FIXED RAIL.
3. INSERT 0-3 BLANK PANELS AS REQUIRED.
4. INSERT UPPER RAIL IN TOP GROOVE OF POWER SUPPLIES & FASTEN WITH SCREWS PROVIDED TO TO END BRACKETS.
5. REMOVE 1 SCREW FROM EACH POWER SUPPLY BOTTOM REAR & ATTACH REAR ANGLE USING THE SAME SCREW
6. MOUNT CENTER SECTION OF SLIDE TO SLIDE MTG PLATE HOLES PROVIDED FOR "CHASSIS TRAK" SLIDE #C300-S-14. IF OTHER REQUIRED, DRILL TO SUIT.
7. MOUNT CHASSIS SLIDE MTG PLATE TO FRONT & REAR SUPPORTS WITH SCREWS PROVIDED.
8. MOUNT SLIDE ADAPTER TO RACK AS REQUIRED.

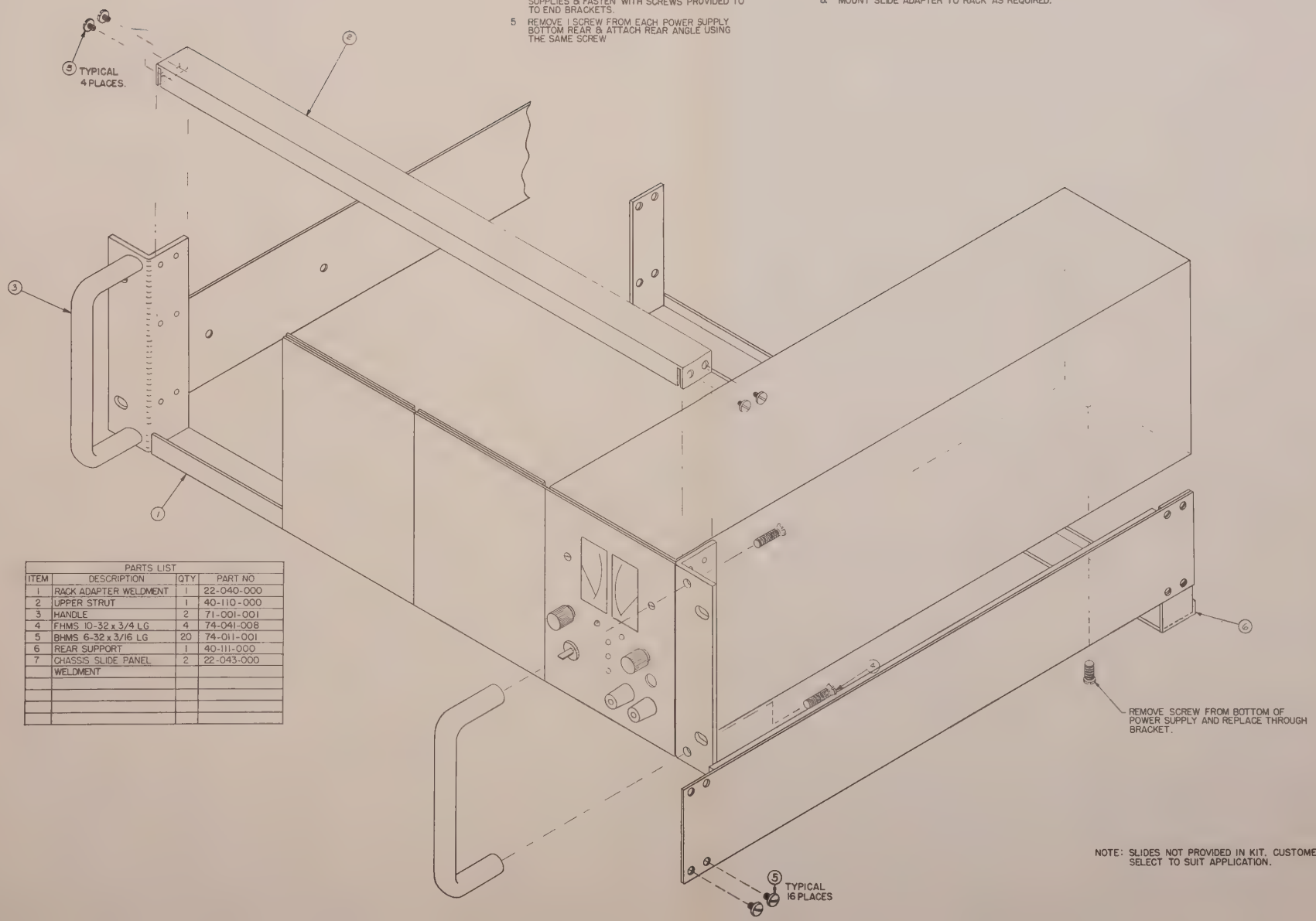

PARTS LIST			
ITEM	DESCRIPTION	QTY	PART NO
1	RACK ADAPTER WELDMENT	1	22-040-000
2	UPPER STRUT	1	40-110-000
3	HANDLE	2	71-001-001
4	FHMS 10-32 x 3/4 LG	4	74-041-008
5	BHMS 6-32 x 3/16 LG	20	74-011-001
6	REAR SUPPORT	1	40-111-000
7	CHASSIS SLIDE PANEL WELDMENT	2	22-043-000

NOTE: SLIDES NOT PROVIDED IN KIT. CUSTOMER TO SELECT TO SUIT APPLICATION.

1. UNPACK & CHECK PARTS AGAINT LIST BELOW.
2. INSTALL 1-4 POWER SUPPLIES BY HOOKING BOTTOM GROOVE OVER LOWER FIXED RAIL.
3. INSERT 0-3 BLANK PANELS AS REQUIRED.
4. INSERT UPPER RAIL IN TOP GROOVE OF POWER SUPPLIES & FASTEN WITH SCREWS PROVIDED TO TO END BRACKETS.
5. REMOVE 1 SCREW FROM EACH POWER SUPPLY BOTTOM REAR & ATTACH REAR ANGLE USING THE SAME SCREW.
6. IMPORTANT - REAR OF SUPPLIES MUST BE SUPPORTED TO RACK BY CUSTOMER SELECTED MEANS.

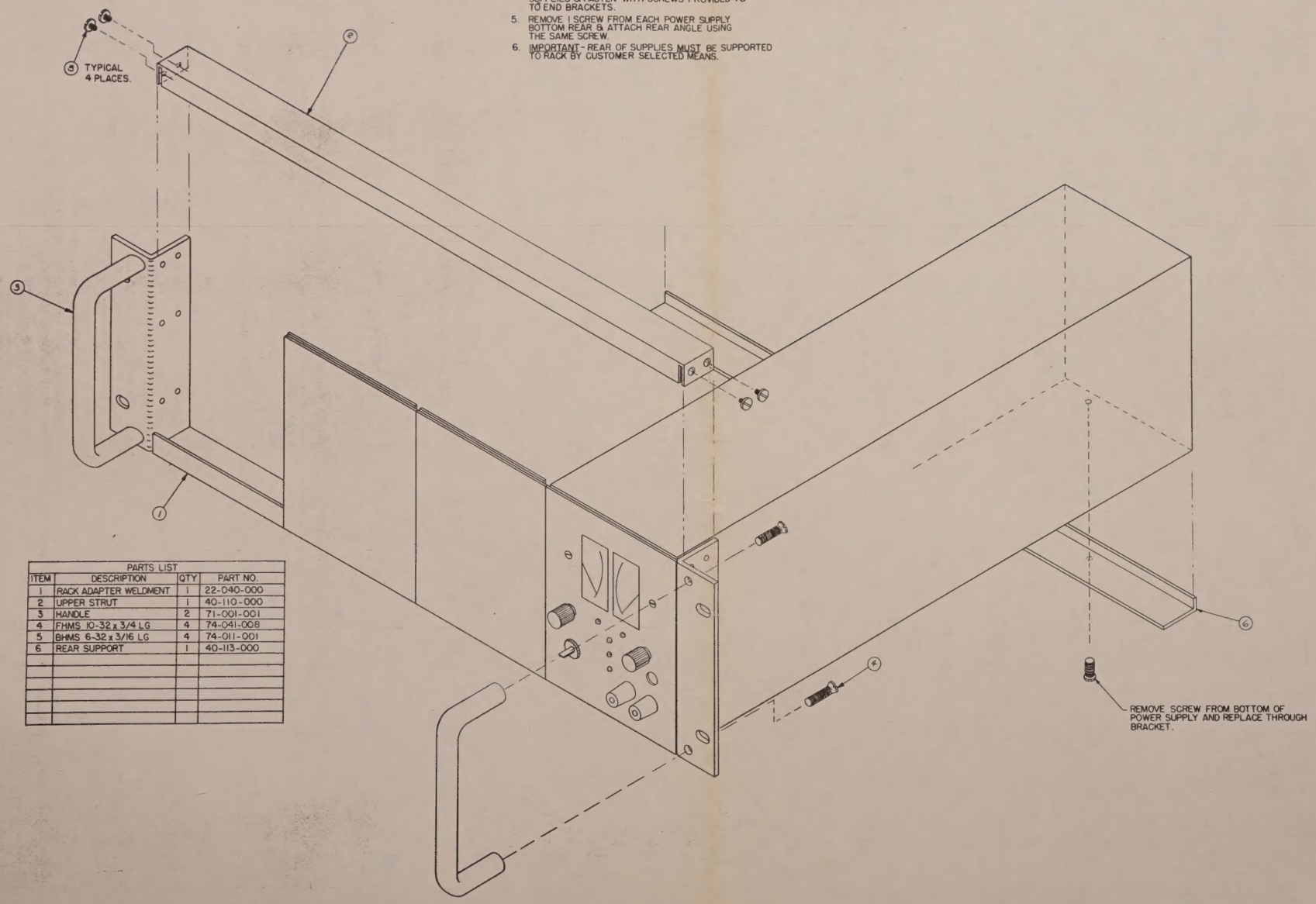

PARTS LIST

ITEM	DESCRIPTION	QTY	PART NO.
1	RACK ADAPTER WELDMENT	1	22-040-000
2	UPPER STRUT	1	40-110-000
3	HANDLE	2	71-001-001
4	FHMS 10-32 x 3/4 LG	4	74-041-008
5	BHMS 6-32 x 3/16 LG	4	74-011-001
6	REAR SUPPORT	1	40-113-000

MP MASTER
MA27880